**SURFACE CEILING DOWNLIGHT - SDOWN**

**Item code 86.OC02.3331.03**



## SDOWN

| | |
|---|---|
| **Item code** | **86.OC02.3331.03** |
| **Product type** | **Outdoor** |
| **Category** | **Surface Ceiling Downlight** |
| **Family** | **SDOWN** |
| **Pictograms** | 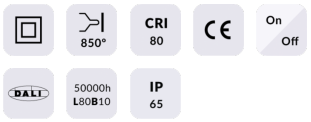 |



| **Dimensions** | |
|---|---|
| **Product dimensions (mm)** | **Ø115X152 mm** |

**Scheme**

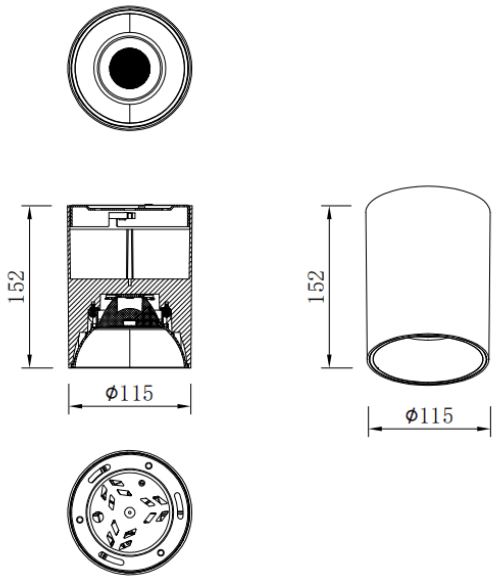



| **Product** | |
|---|---|
| **Real power (W)** | **30** |
| **Real luminous flux (Lm)** | **2400** |
| **Luminous efficiency (Lm/W)** | **80** |
| **Beam angle (º)** | **60** |
| **Life time (h)** | **50000h L80B10** |
| **IP** | **IP65** |
| **Control gear** | **ON-OFF** |
| **Colour temperature (K)** | **3000** |
| **Colour consistency (SDCM)** | **SDCM3** |
| **CRI** | **80** |

## Photometry

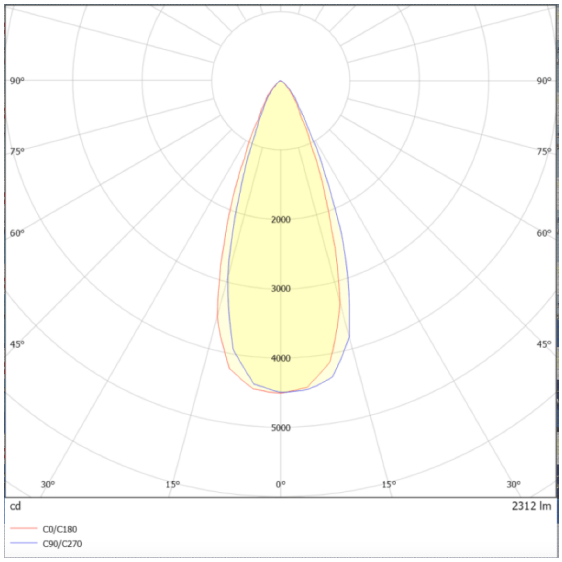
90°
90°
75°
75°
60°
60°
45°
45°
2000
3000
4000
5000
30°
15°
0°
15°
30°
cd
2312 lm
C0/C180
C90/C270